ITEM NO.	PART NUMBER	DESCRIPTION	MATERIAL	DRAWING #	QTY.
1	ST-MT 1.500x1.032 L 36.25	LENGTH: 36-1/4"	CF ANN 4142 1 RD	STOCK	1
2	FP-BD22-3A	END CAP, TUBE, HINGE, BD2200	3/8" HRS	20-2103	1
3	FI .25 X 2.1875 L 34.875	LENGTH: 34-7/8"	1/4" HRS. 2-3/16"	STOCK	1
4	FI .25 X 1.25 L 6	LENGTH: 6"	FI 1/4" x 1-1/4"	STOCK	1
5	FI .25 X 1.25 L 34.875	LENGTH: 34-7/8"	FI 1/4" x 1-1/4"	STOCK	1

	REVISOINS		
REV.	DESCRIPTION	DATE	APPROVED
C	REPLACED 2-1/2" FI WITH 2-3/16"	1/13/2012	

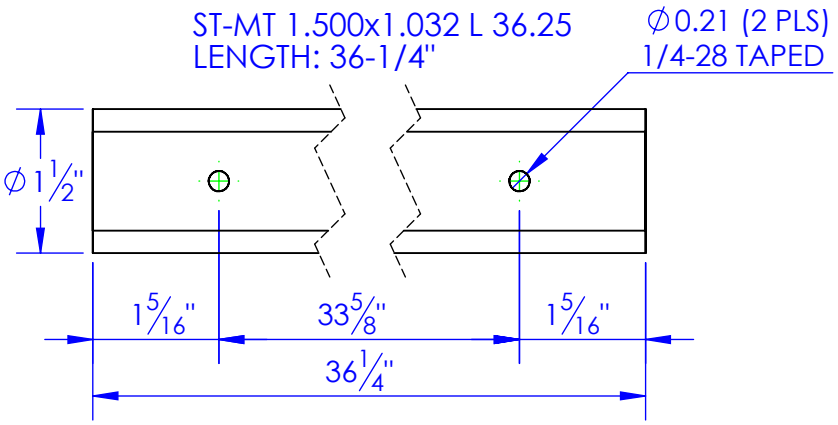

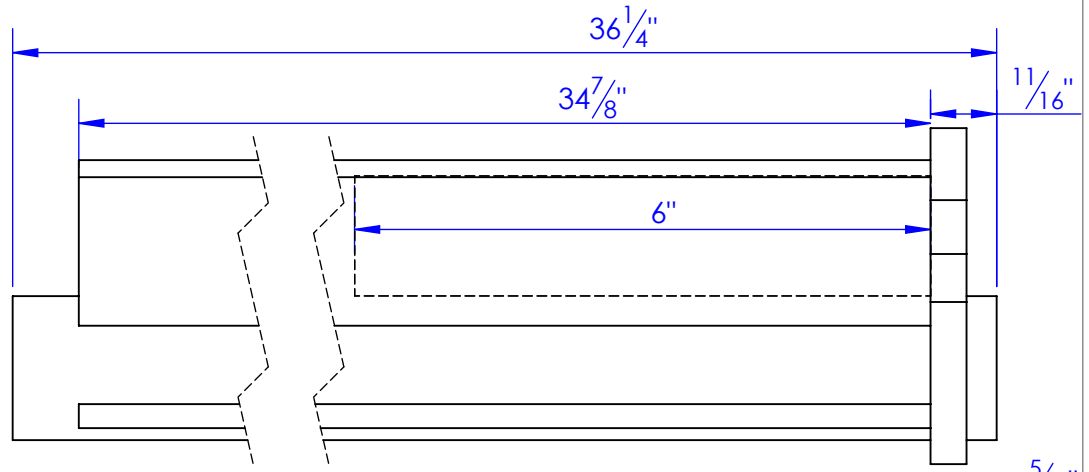

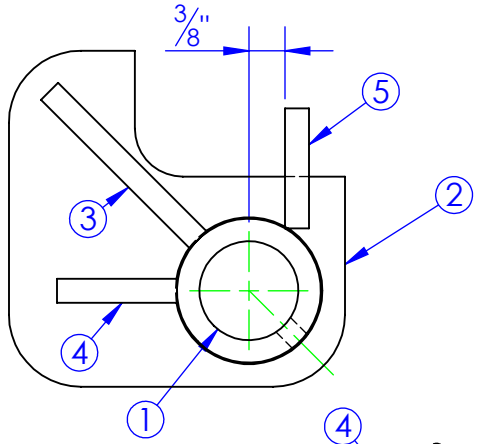

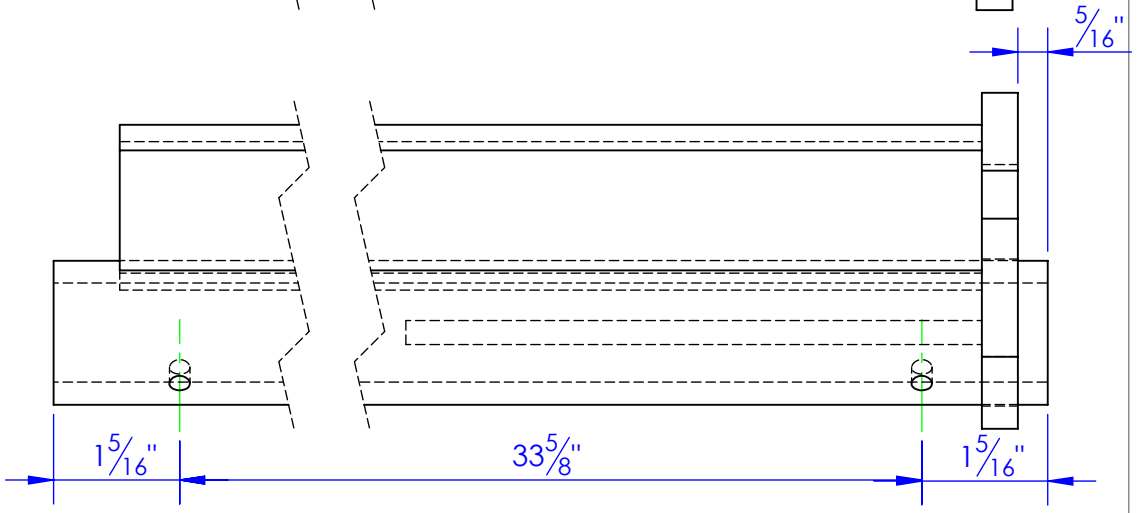

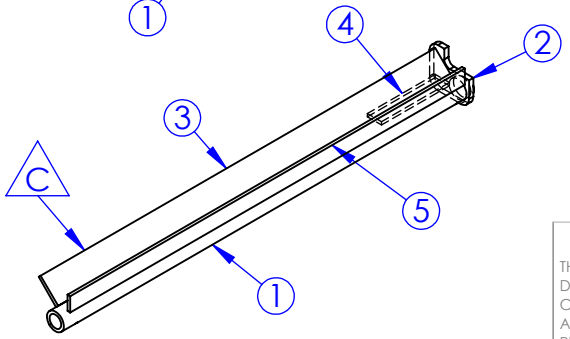

P.O. BOX 248,
SABETHA, KS 66534

TRIPLE C INC.

PROPRIETARY AND CONFIDENTIAL
THE INFORMATION CONTAINED IN THIS DRAWING IS THE SOLE PROPERTY OF TRIPLE C INC. ANY REPRODUCTION IN PART OR AS A WHOLE WITHOUT THE WRITTEN PERMISSION OF TRIPLE C INC. IS PROHIBITED.

DIMENSIONS ARE IN INCHES
TOLERANCES:
FRACTIONAL ±1/16
ANGULAR: MACH ±1 BEND ±
TWO PLACE DECIMAL ±010
THREE PLACE DECIMAL ±005

MATERIAL --

DO NOT SCALE DRAWING

	NAME	DATE
DRAWN	HEATH	1/13/2012
PART #	FP-BD22-3B	
ASM #		

COMMENTS:
HINGE TUBE, BD2200, WLDMENT

SIZE	DWG. NO.	REV.
A	20-1120 C	C

SCALE:1:2 WEIGHT: 18.69 LBS. SHEET 1 OF 1